CTYPO493F787

1987 Catalina 34, Hull # 493
January 2021; Rev J
(AC wires not shown)

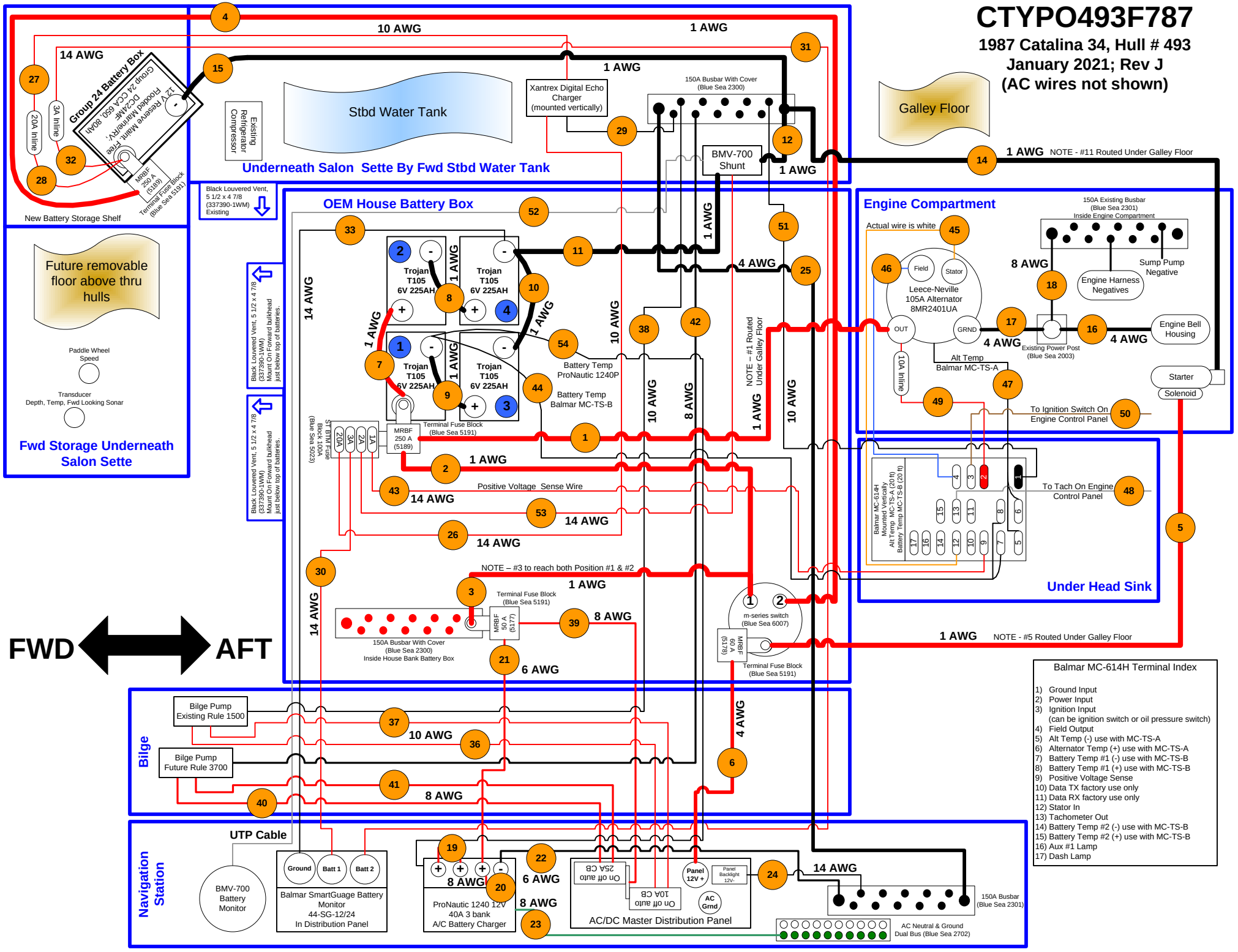

Balmar MC-614H Terminal Index

1) Ground Input
2) Power Input
3) Ignition Input
(can be ignition switch or oil pressure switch)
4) Field Output
5) Alt Temp (-) use with MC-TS-A
6) Alternator Temp (+) use with MC-TS-A
7) Battery Temp #1 (-) use with MC-TS-B
8) Battery Temp #1 (+) use with MC-TS-B
9) Positive Voltage Sense
10) Data TX factory use only
11) Data RX factory use only
12) Stator In
13) Tachometer Out
14) Battery Temp #2 (-) use with MC-TS-B
15) Battery Temp #2 (+) use with MC-TS-B
16) Aux #1 Lamp
17) Dash Lamp